POWER CABLE ACCESSORIES FOR 52 KV

CATALOGUE 2020

Nexans

BRINGS ENERGY TO LIFE

Nexans
BRINGS ENERGY TO LIFE

NEXANS NETWORK SOLUTIONS DIV. EUROMOLD

COMPANY PRESENTATION

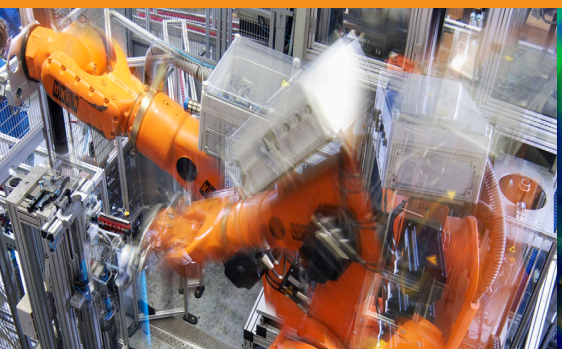

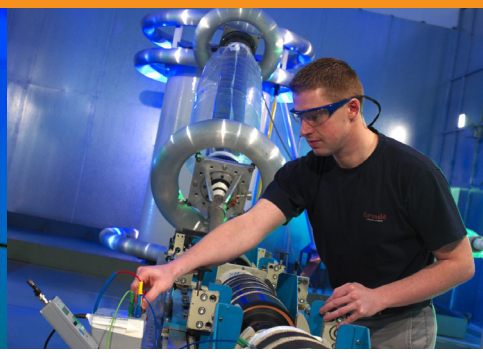

EUROMOLD

Euromold is the leading European specialised designer, manufacturer and distributor of prefabricated cable accessories for medium voltage energy distribution. Euromold provides a complete range of accessories for underground cables: premoulded EPDM rubber connectors for cables and epoxy bushings for transformers and switchgear, as well as a large range of cold-shrinkable terminations and joints from 12 to 42 kV.
Euromold is also the manufacturer of electrical components for the high voltage accessories of the Nexans group.

ISO 9001 Certificate

Since 1992, Euromold's commitment to quality is demonstrated by its ISO 9001 certification.

International standards

All our products meet the International standards like CENELEC HD 629.1, CENELEC EN 50180, IEC 60137, IEC 60502-4… or country specifications. Official certificates, CESI, KEMA, ATEX… prove the conformity of our products.
Long duration tests of existing or new products are continuously performed in our test fields.

Laboratory accreditation

Since June 2000, Euromold's independent ELAB laboratory obtained the BELAC accreditation no.144-TEST conform with the European standards for laboratories ISO 17025 for electrical testing of low and medium voltage cable accessories according to the international standards EN 50393, IEC 60502-4, IEC 61442 and HD 629.

TABLE OF CONTENTS

TEST REPORT

Tested accessories:
Combination of separable tee connector and coupling connector with "F" interface on Q900AR-1 bushings and with outdoor terminations AFN 52-6-D (described in the test report as AFNP 36-6).

ELAB-QFORM-010-01
Rev. 010

ELECTRICAL TESTING LABORATORY

Nexans Network Solutions N.V. – Div. EUROMOLD
ZUID III, Industrielaan 12
B-9320 EREMBODEGEM (AALST) (Site 2)

TEST REPORT

No. TE 213 14 05: contains 39 pages including 6 appendices

Requestor:	Nexans Network Solutions N.V. – Div. Euromold Zuid III – Industrielaan 12 B-9320 Erembodegem

SECURITY CLASSIFICATION: - .

TEST OBJECT	: Combination of separable tee connector and coupling connector for bushings with interface F
TYPE	: **Q909TB/G-S-46-400.630-14-5** **Q909PB/G-S-46-400.630-14-5**
Rated current	: 1250 A
Rated voltage U_0/U	: 26/45 kV
Highest system voltage U_m	: 52 kV
Manufacturer	: Nexans Network Solutions N.V. – Div. Euromold (NNS)
Request number	: TRF 2013-061

Start and end date	Test specification
	IEC 60840 Ed. 4.0 (11/2011) **CENELEC EN IEC 61442 Ed. 2 (03/2005)** **CENELEC HD 629.1 S2 (02/2006) + A1 (09/2008)**
19/03/2014 – 12/06/2014	**Test series:** Test program according IEC 60840 for system 26/45 (52) kV – contract CO 12-2013 §7.1

TEST RESULT: the test object successfully passed the prescribed test series.

ELAB

Lab Technician Approval	Techn. Manager – Strategic Lab Manager Approval
J. Cauwel	ing. E. De Ridder

Erembodegem, 20 June 2014

Made in 2 copies
Copy no. **1**

BELAC
No. 144-TEST

This report may not be reproduced in part, unless authorised so formally by the laboratory. The report applies to the tested objects only.

Test report No. TE 213 14 05

Page 1 of 39

Nexans

EUROLAITE
– A PART OF ADDTECH GROUP

AFN 52

SLIP-ON TERMINATION

APPLICATION

A termination for indoor and outdoor use (up to pollution class d) and exposed to prolonged sunshine and other weather conditions.
Terminations for pollution class e on request. To connect polymeric insulated cable to equipment, overhead lines or busbars.

DESIGN

Termination comprising:

1. Cable lug (included in the standard kit).
2. Water sealing silicone sleeve(s).
3. Silicone module(s) with sheds.
4. Silicone housing with sheds and integrated conductive silicone rubber insert providing stress relief for the cable.
5. Water sealing mastic.
6. Earthing clamp.
7. Earthing lug (not included in the standard kit).

SPECIFICATIONS AND STANDARDS

Type tested according to IEC 60840. Creepage distance according to EN50124-1, IEC/TS 60815-3 pollution class d, IEC60112-CTI>600.

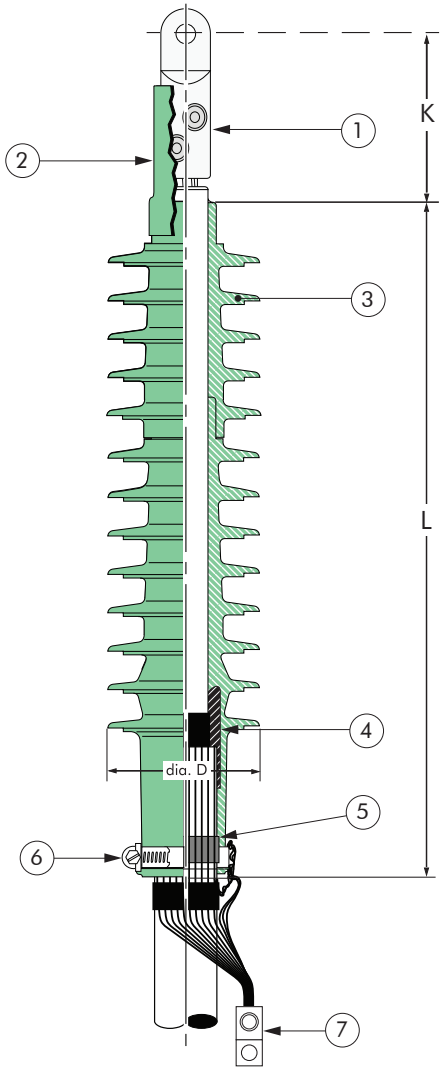

26/45 (52) kV

EUROMOLD®

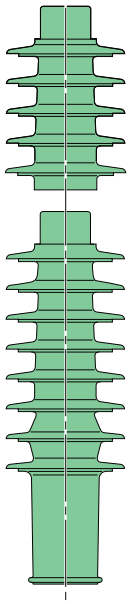

Note:
Distance depends on the cable lug used. See also table X.

Termination type	Voltage Um (kV)	Conductor sizes (mm²) (for information only)	
		min	max
AFN 52	52	95	2000

KIT CONTENTS

A kit always comprises 1 termination housing, 1 or 2 modules with sheds, cable lug, water sealing sleeve, installation instructions, special lubricant, wiper, earthing clamp, water sealing mastic, adhesive tape,... An earthing lug is not included in the standard kit, but can be ordered separately.

ORDERING INSTRUCTIONS

To order the termination, select the ordering part number in table **W**, which gives you the best centring of the core insulation diameter and substitute **X** using table X, according to the conductor size and type.

TABLE W

Voltage Um (kV)	Diameter over core insulation (mm)		Number of sheds	L (mm) max	Dia. D (mm)	Creepage distance (mm)	Ordering part number
	min	max					
52	28.0	32.0	15	660	135	1325	AFN 52-3-D-**X**
	31.5	41.0	15	660	135	1325	AFN 52-4-D-**X**
	39.0	50.0	15	660	135	1325	AFN 52-5-D-**X**
	46.0	58.0	15	660	135	1325	AFN 52-6-D-**X**
	53.0	60.0	13	660	180	1455	AFN 52-7-D-**X**
	59.0	67.0	13	660	180	1455	AFN 52-8-D-**X**
	66.0	73.0	13	660	180	1455	AFN 52-9-D-**X**
	72.0	82.0	13	660	180	1455	AFN 52-10-D-**X**

EXAMPLE:
One outdoor termination for a 52 kV - 630 mm^2 stranded aluminium cable with copper wire screen with a bolted cable core lug, with cable core lug to be used in a d-pollution class environment. The diameter over core insulation is 50 mm. Order a AFN 52-6-D+C400-630x16 termination kit.

TABLE X

Con-ductor sizes (mm^2)	Aluminium conductor		Aluminium and copper conductor	Copper conductor	Distance K (typical) (mm)
	Deep indent	DIN hexagonal	Bolted	DIN hexagonal	
95	CAA 95-M 12	95x12 ALU-F-V	C95-240x16	95x12 KU-F-V	100 to120
120	CAA 120-M 12	120x12 ALU-F-V		120x12 KU-F-V	
150	CAA 150-M 12	150x12 ALU-F-V		150x12 KU-F-V	
185	CAA 185-M 12	185x12 ALU-F-V	C185-400x16	185x12 KU-F-V	
240	CAA 240-M 12	240x16 ALU-F-V		240x16 KU-F-V	120 to 160
300	CAA 300-M 16	300x16 ALU-F-V		300x16 KU-F-V	
400	CAA 400-M 16	400x16 ALU-F-V	C400-630x16	400x16 KU-F-V	150 to 270
500	CAA 500-M 16	500x16 ALU-F-V		500x16 KU-F-V	
630	CAA 630-4M8	630x16 ALU-F-V	C630-1000x20	-	
800	-	-	C800-1200x20	-	
1000	-	-		-	
1200	-	-		-	

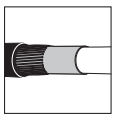

For use with copper wire screened cables. No earthing device is necessary.

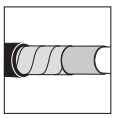

For use with copper tape screened cables. Order: -/MT.

For other pullution classes. Please contact our representative.

For use with other cable types. Please contact our representative.

Other cable lugs on request.

No heating or flame is required.

52TTGI1

HEAT-SHRINKABLE INDOOR TERMINATION

APPLICATION

The 52TTGI1 heat-shrinkable indoor terminations are designed for plastic or EPR insulated cables with Cu wire screen or Cu tape screen.

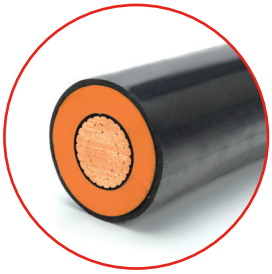

TECHNICAL CHARACTERISTICS

A stress control patch is applied at the screen cut of the termination and helps to control the field together with stress control tubing.
Semiconductive tubing creates a bridge for leakage currents placed onto and covering the screen wires or earth braid.
Another layer of stress control mastic covers the top end of the semiconductive tubing.
Red anti-tracking mastic is wrapped onto the top end of the tubing.
The lug and cable outer sheath is sealed with anti-tracking mastic.
Heavy wall anti-tracking tube and anti-tracking rain sheds complete the termination.

26/45 (52) kV

Meets specifications:
IEC 60840

Voltage Um kV	Type	Application range (mm²)	L (mm)
52	52TTGI1.50i	25÷50	900
52	52TTGI1.95i	70÷95	900
52	52TTGI1.150i	120÷150	900
52	52TTGI1.240i	185÷240	900
52	52TTGI1.400i	300÷400	900
52	52TTGI1.630i	500÷630	900
52	52TTGI1.1000i	800÷1000	900

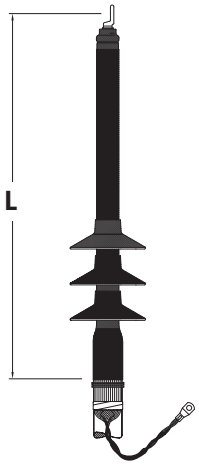

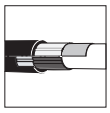

For cables with AL foil screen/ vapor screen please contact our sales office.

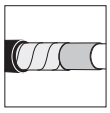

Please add a the letter "A" at the end of the product code for cables with Cu tape screen.

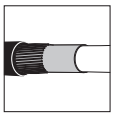

Earth kit included for cables with wire screens.

For other cable types please contact our sales office.

Trifurcating kits "TK" available separately. Please see available sizes of specific catalogue page.

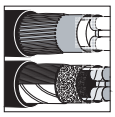

Various earth connection design solutions exist for armoring. For exact details contact our sales office.

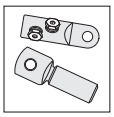

Design accommodates various lug types.

Various earth connection kits are available for screen connection. For exact details contact our sales office.

HEAT-SHRINKABLE
OUTDOOR TERMINATION

52TTGE1

26/45 (52) kV

Meets specifications:
IEC 60840

APPLICATION

The 52TTGE1 heat-shrinkable outdoor terminations are designed for plastic or EPR insulated cables with Cu wire screen or Cu tape screen.

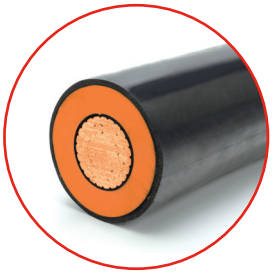

TECHNICAL CHARACTERISTICS

A stress control patch is applied at the screen cut of the termination and helps to control the field together with stress control tubing.
Semi-conductive tubing creates a bridge for leakage currents placed onto and covering the screen wires or earth braid.
An other layer of stress control mastic covers the top end of the semiconductive tubing.
Red anti-tracking mastic is wrapped onto the top end of the tubing.
The lug and cable outer sheath is sealed with anti-tracking mastic.
Heavy wall anti-tracking tube and anti-tracking rain sheds complete the termination.

Voltage Um kV	Type	Application range (mm^2)	L (mm)
52	52TTGE1.50i	25÷50	900
52	52TTGE1.95i	70÷95	900
52	52TTGE1.150i	120÷150	900
52	52TTGE1.240i	185÷240	900
52	52TTGE1.400i	300÷400	900
52	52TTGE1.630i	500÷630	900
52	52TTGE1.100i	800÷1000	900

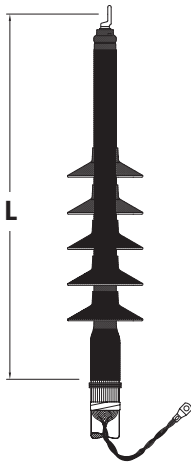

Designed for outdoor application.

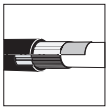

For cables with AL foil screen/ vapor screen please contact our sales office.

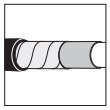

Please add a the letter "A" at the end of the product code for cables with Cu tape screen.

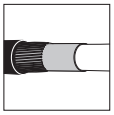

Earth kit included for cables with wire screens.

For other cable types please contact our sales office.

Trifurcating kits "TK" available separately. Please see available sizes of specific catalogue page.

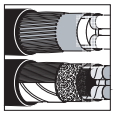

Various earth connection design solutions exist for armoring. For exact details contact our sales office.

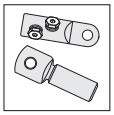

Design accommodates various lug types.

Various earth connection kits are available for screen connection. For exact details contact our sales office.

Nexans

EUROLAITE
– A PART OF ADDTECH GROUP

52GTS1

HEAT-SHRINKABLE STRAIGHT JOINT

APPLICATION

52GTS1 straight joint are designed for unarmored plastic or HEPR insulated cables with Cu wire screen.

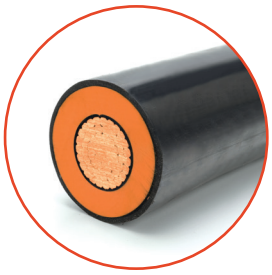

TECHNICAL CHARACTERISTICS

NGS semi-conductive tape is used to fill the gaps, cover the connector.
The screen cut on both sides are covered with stress grading mastic plates as well as the connector area.
The joint body consists of a stress control tubing, an insulating, heavy wall tubing and finally heavy dual wall screened insulating tube.
The outer sheath is restored with GT4 adhesive lined heavy wall tubing.

26/45 (52) kV

Meets specifications:
IEC 60840

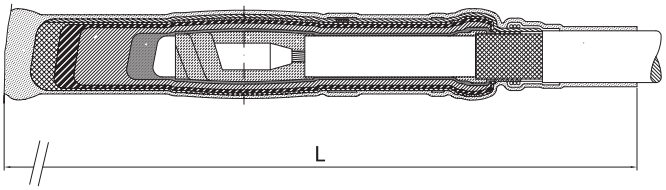

Voltage Um kV	Type	Application range (mm2)	L (mm)
52	52GTS1.50i	25÷50	1000
52	52GTS1.95i	70÷95	1000
52	52GTS1.150i	120÷150	1000
52	52GTS1.240i	185÷240	1200
52	52GTS1.400i	300÷400	1200
52	52GTS1.630i	500÷630	1500
52	52GTS1.1000i	800÷1000	1500

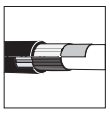

For cables with AL foil screen/ vapor screen please contact our sales office.

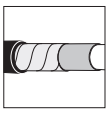

Please add a the letter "A" at the end of the product code for cables with Cu tape screen.

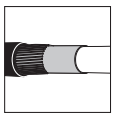

Earth kit included for cables with wire screens.

For other cable types please contact our sales office.

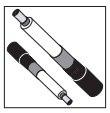

Please contact our sales office when inquiring joints for same type cables with different cross sections.

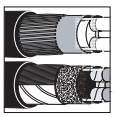

Various earth connection design solutions exist for armoring. For exact details contact our sales office.

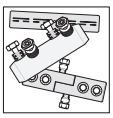

Design accom-modates various connector/ferrule types.

Various earth connection kits are available for screen connection. For exact details contact our sales office.

EUROLAITE
– A PART OF ADDTECH GROUP

Nexans

Q909TB

INTERFACE F
TEE CONNECTOR

APPLICATION

Separable tee shape connector (bolted type) designed to connect polymeric insulated cable to equipment (transformers, switchgear, motors, ...).
Also connects cable to cable when using the appropriate mating parts.

TECHNICAL CHARACTERISTICS

- The thick conductive EPDM jacket provides a total safe to touch screen which ensures safety for personnel.
- Each separable connector is tested for AC withstand and partial discharge prior to leaving the factory.

DESIGN

Separable connector comprising:

1. Conductive EPDM insert.
2. Conductive EPDM jacket.
3. Insulating EPDM layer moulded between the insert and the jacket.
4. Type F - interface as described by CENELEC EN 50180 and 50181.
5. Conductor contact.
6. Basic insulating plug (with VD point).
7. Cable reducer.
8. Conductive rubber cap.
9. Stud+nut+washer.
10. Earthing lead.
11. Heatshrink sleeve.

The screen break design enables cable outer sheath testing without removing or dismantling the connector.

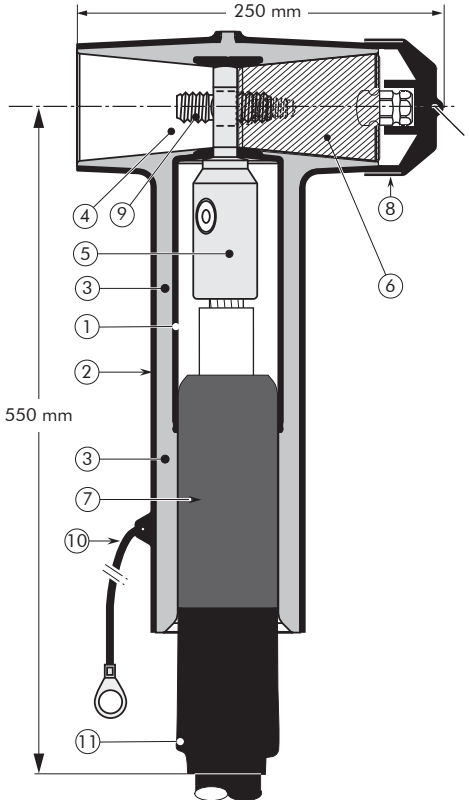

26/45 (52) kV

1250 A

EUROMOLD®

SPECIFICATIONS AND STANDARDS

The Q909TB separable connector is type tested according IEC 60840.

Separable connector type	Voltage Um (kV)	Current Ir (A)	Conductor sizes (mm^2)	
			min	max
Q(M)(H)909TB/G	52	1250	95	1200

Nexans

EUROLAITE
– A PART OF ADDTECH GROUP

KIT CONTENTS

The complete Q(M)(H)909TB/G tee connector kit comprises 1x the following components:

The kit also comprises silicone grease, watersealing mastic, gloves, roll adhesive tape, heatshrink sleeve, installation instructions and crimp chart.

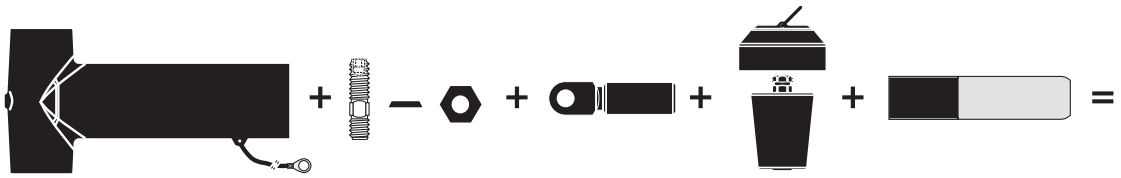

Q(M)(H)909TB/G-S-**W**-**X** connector kit

Connector housing Q909BT/G

Stud+nut+ washer

Conductor contact 900TBC-**X**

Basic insulating plug Q900BIPA + rubber cap

Cable reducer Q972CA-**W**

ORDERING INSTRUCTIONS

Order QM909TB or QH909TB depending on the connector routine test required (see table Y). To order the tee connector, select the ordering part number which gives the best centring of the core insulation diameter and substitute **X** using table X, according to the conductor size and type.

EXAMPLE:

The copper wire screened cable is 52 kV, 1000 mm^2 stranded aluminium with a diameter over core insulation of 58 mm. Order QM909TB/G-S-53-1000AL1 tee connector kit.

TABLE W

Ordering part number	Dia. over core insulation (mm)	
	min	max
Q(M)(H)909TB/G-S-25-**X**	27.0	33.5
Q(M)(H)909TB/G-S-30-**X**	32.5	41.0
Q(M)(H)909TB/G-S-37-**X**	40.0	48.0
Q(M)(H)909TB/G-S-43-**X**	46.5	51.0
Q(M)(H)909TB/G-S-46-**X**	49.5	55.0
Q(M)(H)909TB/G-S-50-**X**	54.0	59.0
Q(M)(H)909TB/G-S-53-**X**	57.0	64.0
Q(M)(H)909TB/G-S-58-**X**	62.5	68.0

TABLE X

Conductor sizes (mm^2)	Aluminium conductor		Aluminium and copper conductor		Copper conductor
	Deep indent	DIN hexagonal	Bolted		DIN hexagonal
95	95AL1	95AL2	95.240UN5		95CU2
120	120AL1	120AL2			120CU2
150	150AL1	150AL2			150CU2
185	185AL1	185AL2		185.400UN5	185CU2
240	240AL1	240AL2			240CU2
300	300AL1	300AL2			300CU2
400	400AL1	400AL2	400.630UN5		400CU2
500	500AL1	500AL2			500CU2
630	630AL1	630AL2			630CU2
800	800AL1	-		800.1200UN5	800CU2
1000	1000AL1	-			1000CU2
1200	1200AL1	-			1200CU2

TABLE Y

Type	Partial discharge extinction	AC voltage
QM909TB	5 Pc @ 52 kV	1' @ 97 kV
QH909TB	5 Pc @ 52 kV	1' @ 115 kV + 30' @ 90 kV

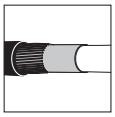

For use with copper wire screened cables. No earthing device is necessary.

For use with other cable types. Please contact our representative.

Components can be ordered individually.

When installed on an appropriate equipment bushing: 1250 A continuously.

Q909PB

INTERFACE F
COUPLING CONNECTOR

APPLICATION

Separable coupling connector (bolted type) for dual cable arrangement. It has been designed to be used with Q909TB separable tee connector.

TECHNICAL CHARACTERISTICS

- The thick conductive EPDM jacket provides a total safe to touch screen which ensures safety for personnel.
- Each separable connector is tested for AC withstand and partial discharge prior to leaving the factory.

DESIGN

Separable connector comprising:

1. Conductive EPDM insert.
2. Conductive EPDM jacket.
3. Insulating EPDM layer moulded between the insert and the jacket.
4. Interface to fit 909TB.
5. Conductor contact.
6. Basic insulating plug (with VD point).
7. Cable reducer.
8. Conductive rubber cap.
9. Stud+nut+washer.
10. Earthing lead.
11. Bus for 909PB.
12. Heatshrink sleeve.

The screen break design enables cable outer sheath testing without removing or dismantling the connector.

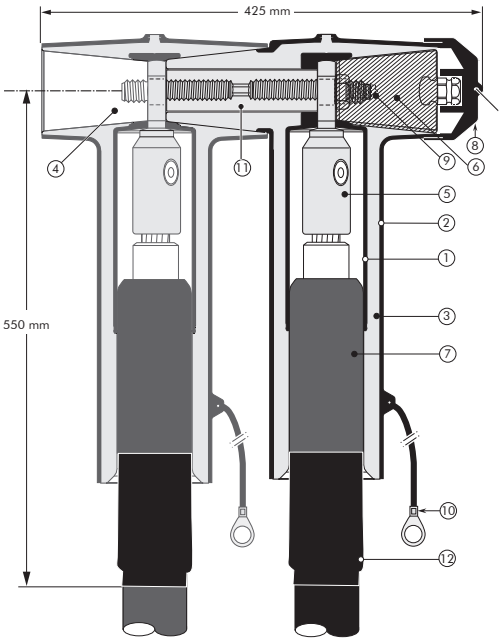

26/45 (52) kV

1800 A

EUROMOLD®

SPECIFICATIONS AND STANDARDS

The Q909PB coupling connector is type tested according IEC 60840.

Separable connector type	Voltage Um (kV)	Current Ir (A)	Conductor sizes (mm^2)	
			min	max
Q(M)(H)909PB/G	52	1800	95	1200

KIT CONTENTS

The complete Q(M)(H)909PB/G tee connector kit comprises the following components:

The kit also comprises silicone grease, watersealing mastic, gloves, roll adhesive tape, heatshrink sleeves, installation instructions and crimp chart.

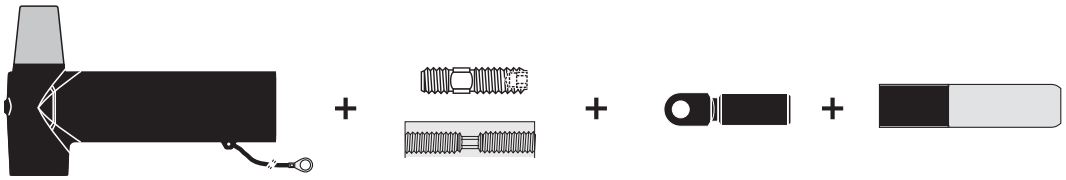

Q(M)(H)909PB/G-S-**W-X** coupling connector kit

Connector housing Q909BP/G

Contact rod and stud

Conductor contact 900T(M)BC-**X**

Cable reducer Q972CA-**W**

ORDERING INSTRUCTIONS

Order QM909PB or QH909PB depending on the connector routine test required (see table Y). To order the tee connector, select the ordering part number which gives the best centring of the core insulation diameter and substitute **X** using table X, according to the conductor size and type.

EXAMPLE:

The copper wire screened cable is 52 kV, 1000 mm^2 stranded aluminium with a diameter over core insulation of 58 mm.
Order QM909PB/G-S-53-1000AL1 tee connector kit.

TABLE Y

Type	Partial discharge extinction	AC voltage
QM909TB	5 pC @ 52 kV	1' @ 97 kV
QH909TB	5 pC @ 52 kV	1' @ 115 kV + 30' @ 90 kV

TABLE W

Ordering part number	Dia. over core insulation (mm)	
	min	max
Q(M)(H)909TB/G-S-25-**X**	27.0	33.5
Q(M)(H)909TB/G-S-30-**X**	32.5	41.0
Q(M)(H)909TB/G-S-37-**X**	40.0	48.0
Q(M)(H)909TB/G-S-43-**X**	46.5	51.0
Q(M)(H)909TB/G-S-46-**X**	49.5	55.0
Q(M)(H)909TB/G-S-50-**X**	54.0	59.0
Q(M)(H)909TB/G-S-53-**X**	57.0	64.0
Q(M)(H)909TB/G-S-58-**X**	62.5	68.0

TABLE X

Conductor sizes (mm^2)	Aluminium conductor		Aluminium and copper conductor		Copper conductor
	Deep indent	DIN hexagonal	Bolted		DIN hexagonal
95	95AL1	95AL2	95.240UN5		95CU2
120	120AL1	120AL2			120CU2
150	150AL1	150AL2			150CU2
185	185AL1	185AL2		185.400UN5	185CU2
240	240AL1	240AL2			240CU2
300	300AL1	300AL2			300CU2
400	400AL1	400AL2	400.630UN5		400CU2
500	500AL1	500AL2			500CU2
630	630AL1	630AL2			630CU2
800	800AL1	-		800.1200UN5	800CU2
1000	1000AL1	-			1000CU2
1200	1200AL1	-			1200CU2

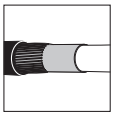

For use with copper wire screened cables. No earthing device is necessary.

For use with other cable types. Please contact our representative.

Components can be ordered individually.

1250 A

When installed on an appropriate equipment bushing: 1250 A continuously.

1800 A

When in a daisy chain arrangement or similar: 1800 A continuously.

Q900AR-1/Q900AR-2

INTERFACE F
EQUIPMENT BUSHING

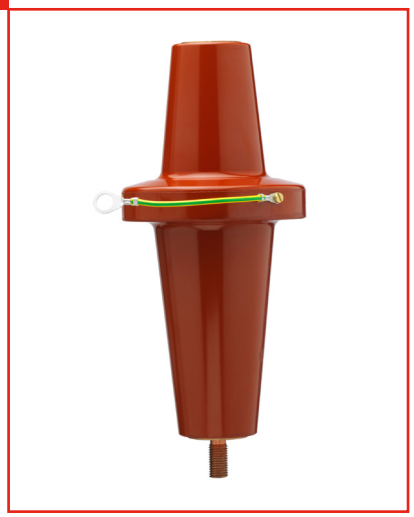

APPLICATION

Moulded epoxy insulated bushings for use in equipment, typically for transformers, switchgear, capacitors...

TECHNICAL CHARACTERISTICS

- Each bushing is tested for AC withstand and partial discharge prior to leaving the factory.

SPECIFICATIONS AND STANDARDS

The bolted type equipment bushings Q900AR-X are moulded epoxy insulated parts with type F interface. They are type tested according IEC 60137 and IEC 60840 for 52 kV Um.

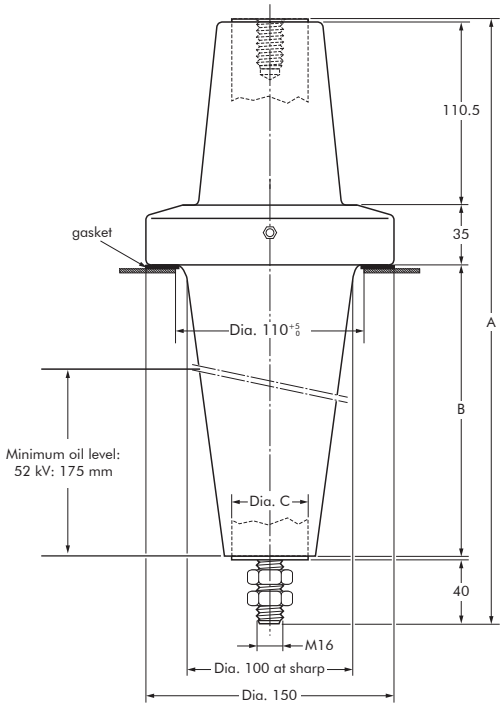

26/45 (52) kV

Up to 1250 A

EUROMOLD®

ORDERING INSTRUCTIONS

To order the equipment bushing, specify the type.
The bushing is supplied with an earth jumper (/J). Order QM or QH depending on the routine test required (see table below). E.g. QM900AR-2/J

Type	Partial discharge extinction	AC voltage
QM900AR-X	5 pC @ 52 kV	1' @ 97 kV
QH900AR-X	5 pC @ 52 kV	1' @ 115 kV + 30' @ 90 kV

Equipment bushing type	Interface type	Max. operating voltage U_m (kV)	Current I_r (A)	Dimensions (mm)		
				A	B	Dia. C
Q(M)(H)900AR-1	F3	52	1250	364	175	32
Q(M)(H)900AR-2	F2	52	630	364	175	25

Nexans

EUROLAITE
– A PART OF ADDTECH GROUP

FIXINGS FOR EQUIPMENT BUSHINGS

Q900AR-X/J BUSHING

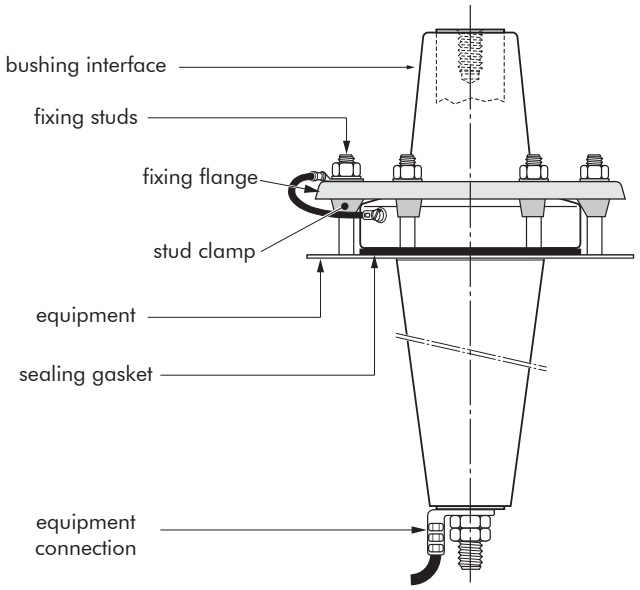

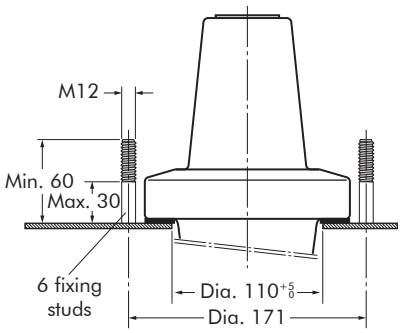

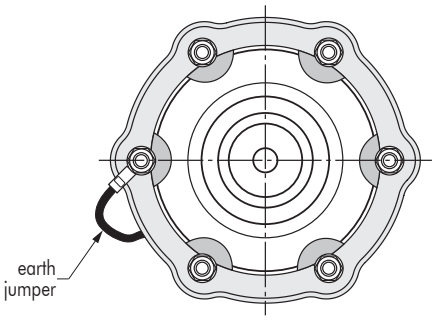

BUSHING CLAMPING KIT

To order the bushing clamping kit with DIN style fixing flange, simply specify KBCDS-400.Contents:

- 1 x fixing flange DIN style
- 6 x stud clamp EN 50180-3
- 1 x sealing gasket.

POSSIBLE ARRANGEMENTS

Q909TB/G

Single cable arrangement.

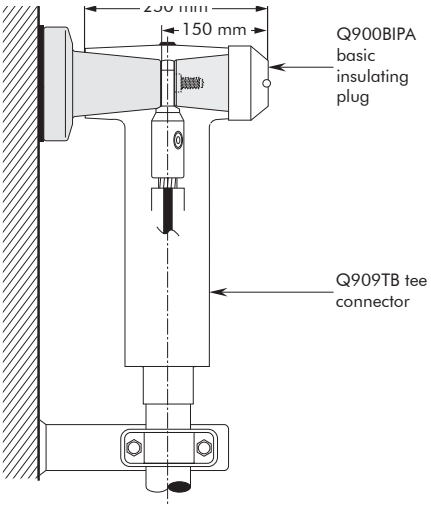

Q909TB-P2

Dual cable arrangement.

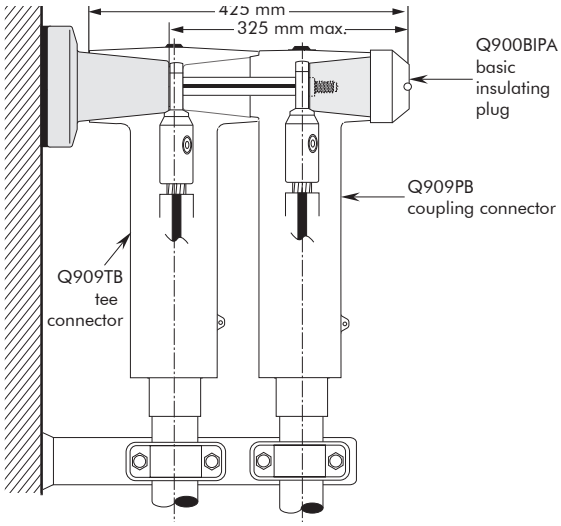

CABLE TESTING

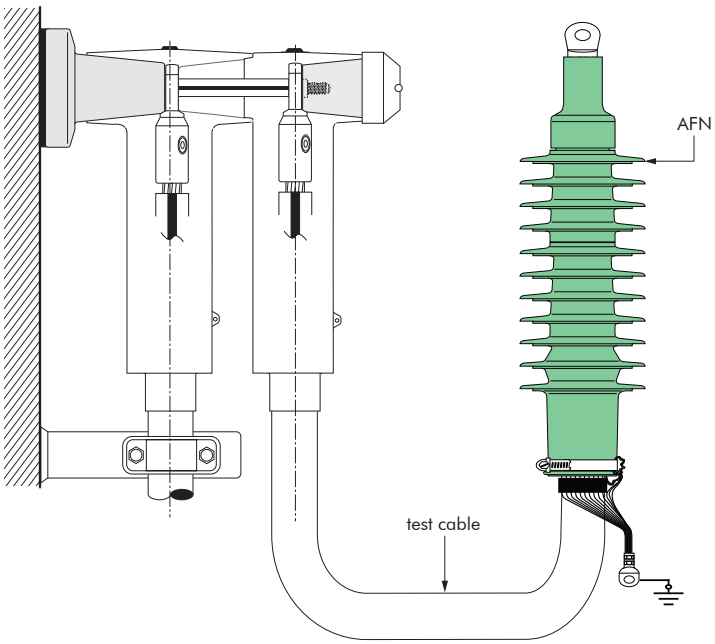

Note:

Test cable has to be supported. The weight of the test cable must not be borne by the connection bushing/TB connector.

ACCESSORIES

APPLICATION

For use with connectors and bushings with an interface F as described by CENELEC EN 50180 and 50181.

TECHNICAL CHARACTERISTICS

All these products, except the earthing plugs, are tested for AC withstand and partial discharge prior to leaving the factory.

26/45 (52) kV

Q900DR-B/G DEAD-END RECEPTACLE

Fits over a bushing with a type F interface to provide 'dead-end' facility. The dead-end receptacle is supplied with an earth lead.

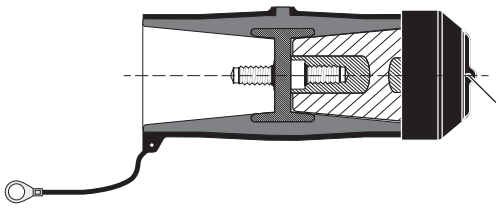

ORDERING INSTRUCTIONS

Order Q900DR-B/G for 52 kV applications.

Q900BE/G BUSHING EXTENDER

Provides an extension piece to allow cables to stand away from equipment.

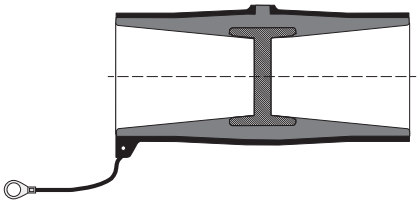

ORDERING INSTRUCTIONS

Order Q900BE/G for 52 kV applications. Delivered with stud/nut/washer.

Q900SOP-B STAND-OFF PLUG

Is designed to support and 'dead-end' connectors with a type F interface when removed from equipment.

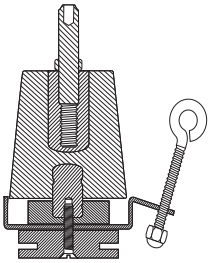

ORDERING INSTRUCTIONS

Order Q900SOP-B for 52 kV applications.

900GP-B/900GP-SBT EARTHING PLUG

Is designed to support and earth connectors with a type F interface when removed from equipment.

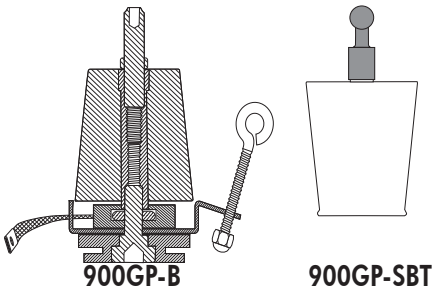

ORDERING INSTRUCTIONS

Order 900GP-B/900GP-SBT.

Q900BIPA BASIC INSULATING PLUG

Acts as a tightening nut for the Q909TB and Q909PB tee connector kits.
The plug contains a voltage detection point.
The conductive rubber protection cap is included.

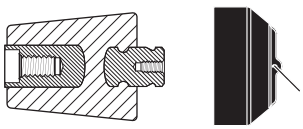

ORDERING INSTRUCTIONS

Order Q900BIPA for 52 kV applications.